Nader 良信电器

Photovoltaic Industry

CONTENTS

Nader 良信电器
高端低压电气系统解决方案专家

PV Industry Global installation cpacity

- Global photovoltaic capacity **81GW** in 2017 , with 4% growth rate
- Total global capacity **390GW** , till 2017

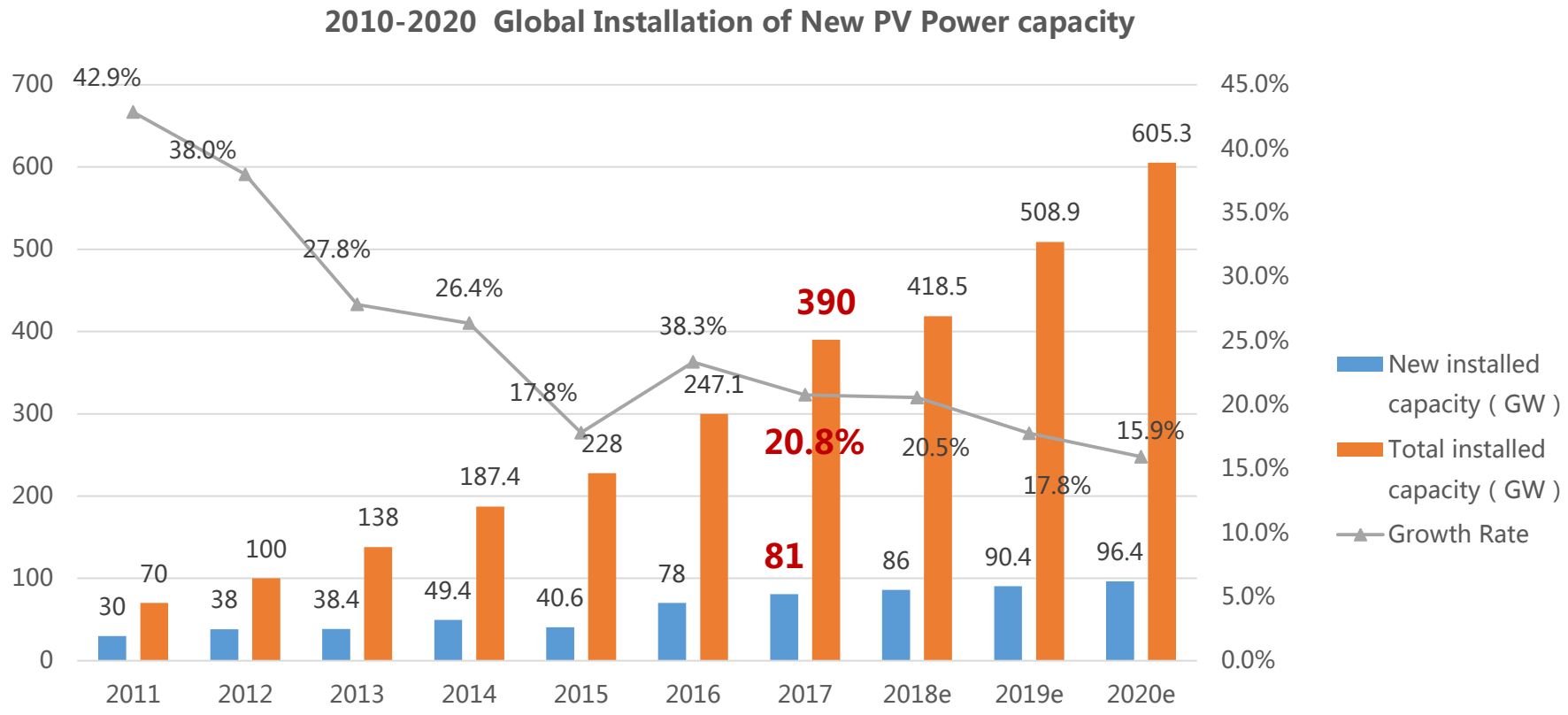

Total PV capacity of each country

Till 2016

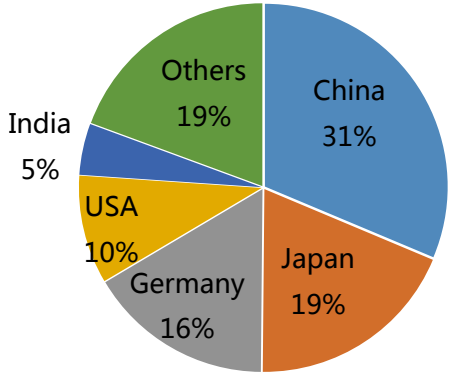

New PV capacity of each country

2016

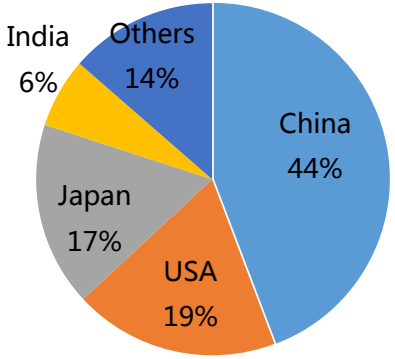

Nader 良信电器
高端低压电气系统解决方案专家

PV Industry Domestic installation cpacity

- Global photovoltaic capacity **34.5GW** in 2016 , with 128.3% growth rate
- Total global capacity **77.4GW** , till 2016

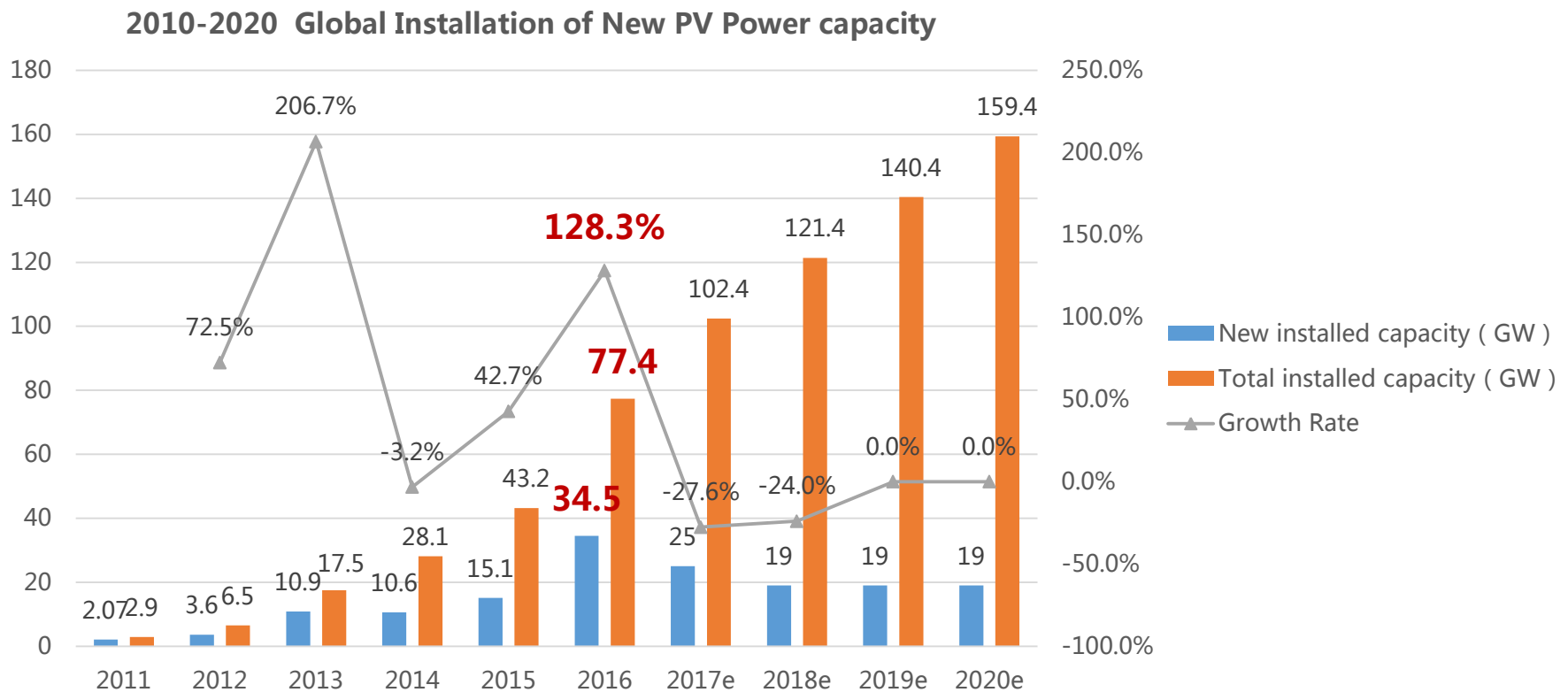

Nader 良信电器
高端低压电气系统解决方案专家

Renewable Energy development

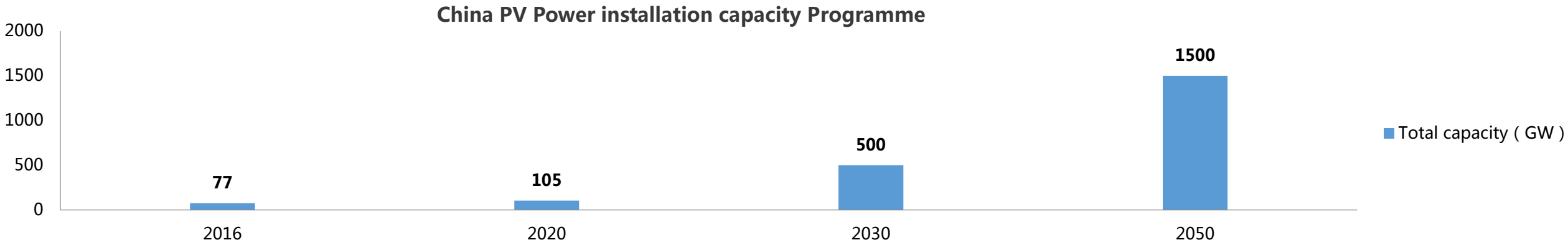

2016-2050 Energy Structure transformation

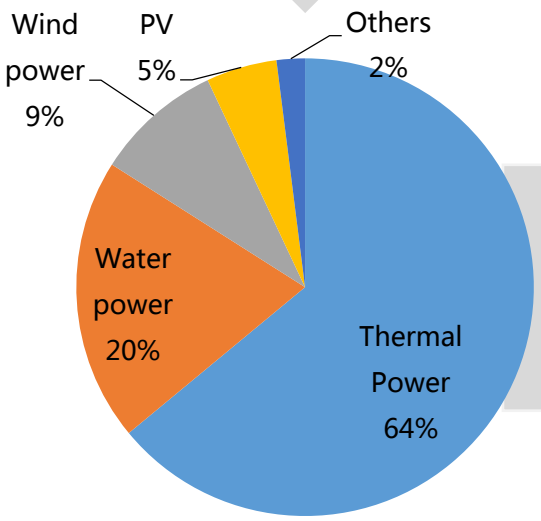

Growth Rate 230%

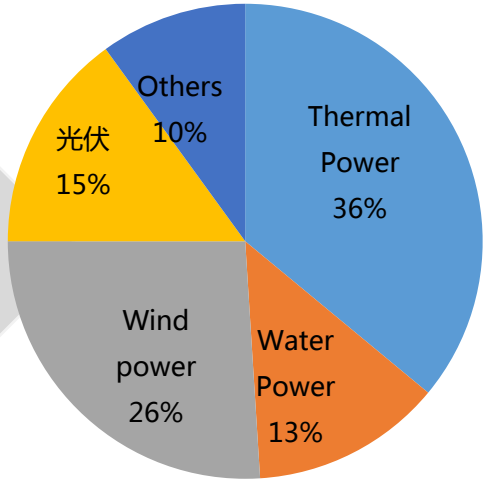

Nader 良信电器
高端低压电气系统解决方案专家

PV Industry PV industry chain

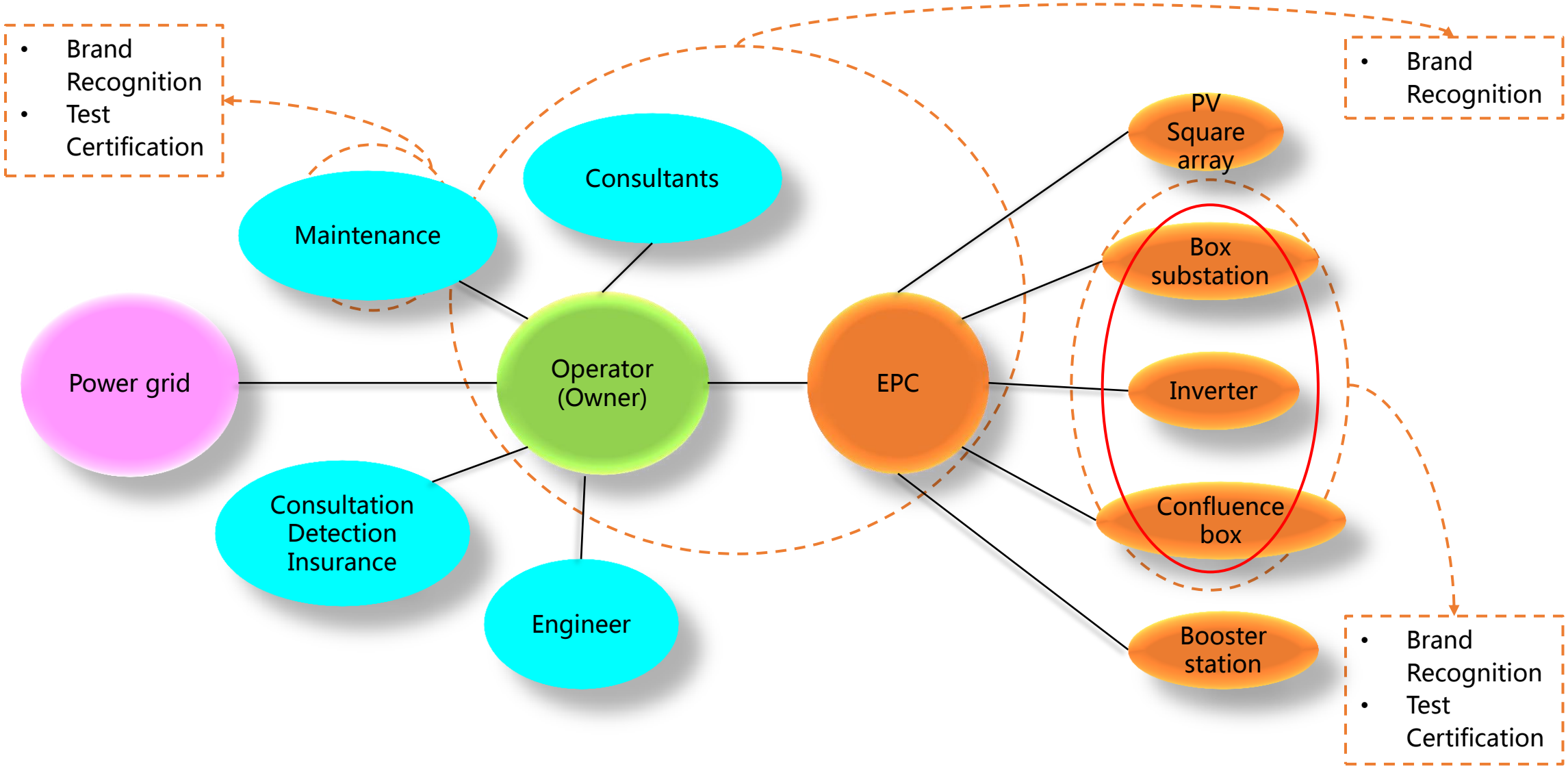

Nader 良信电器
高端低压电气系统解决方案专家

PV Industry Operators

Power Grid — Operator — EPC

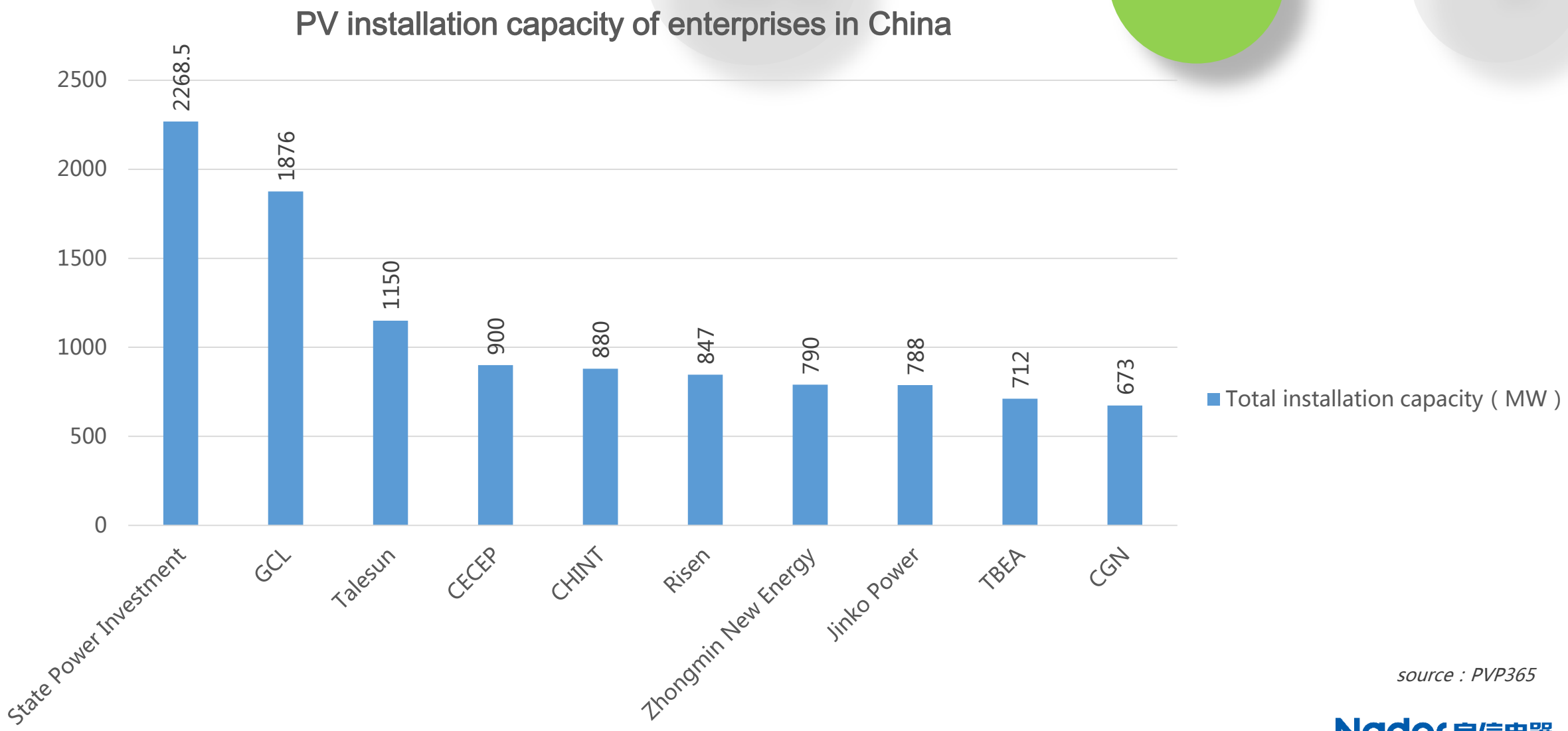

source : PVP365

Nader 良信电器
高端低压电气系统解决方案专家

PV Industry PV EPC

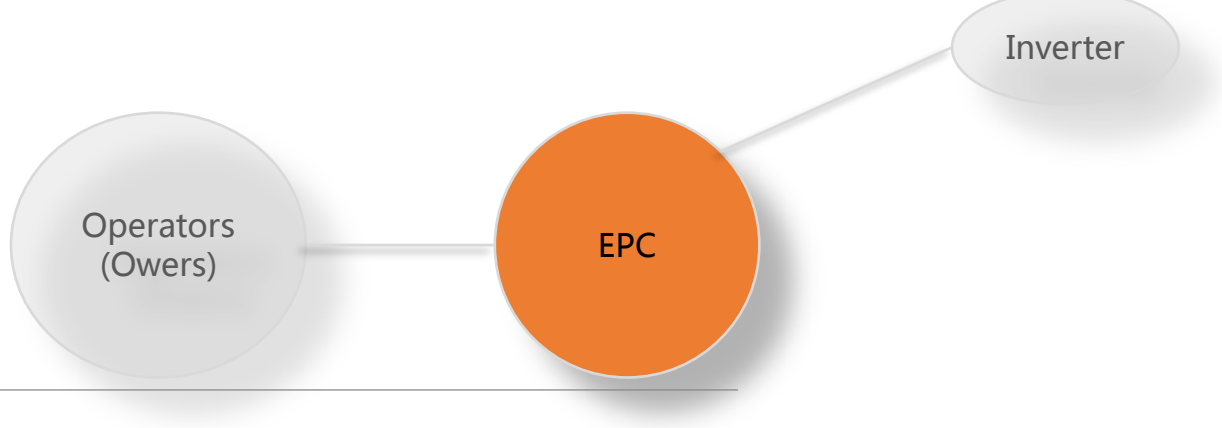

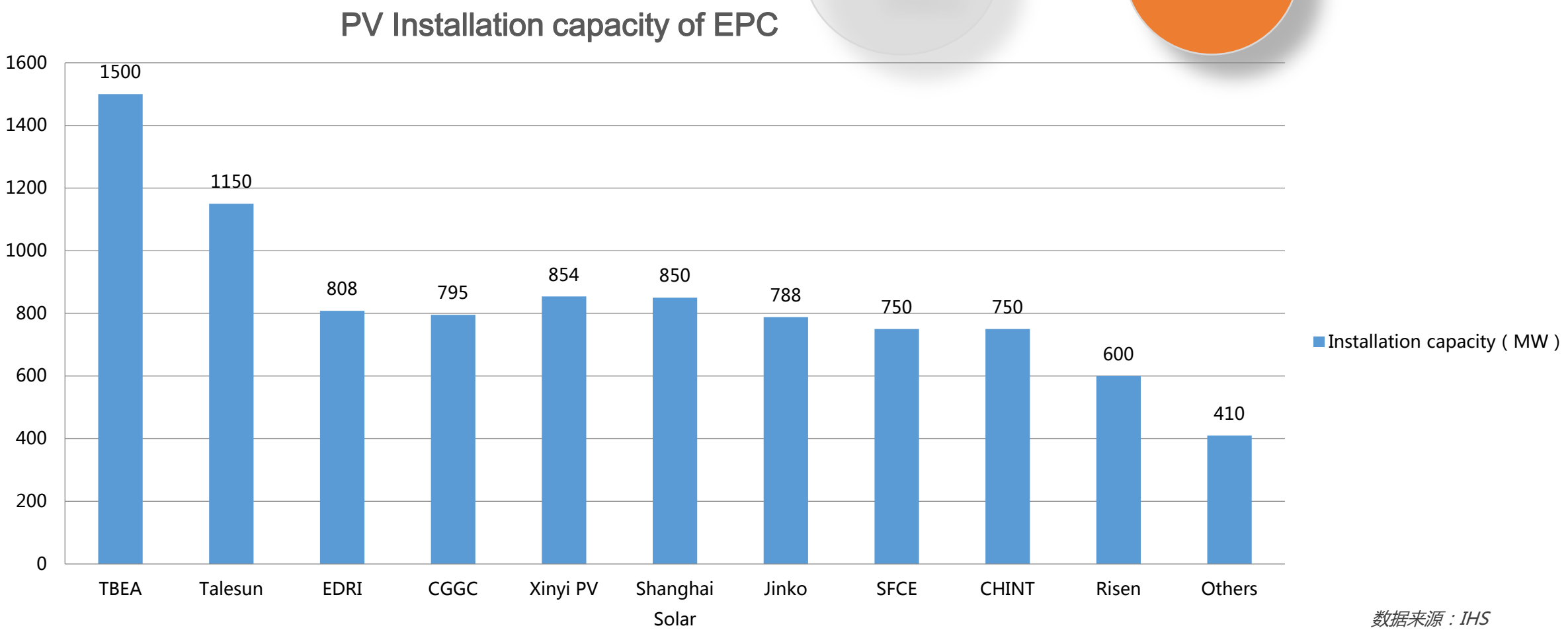

数据来源：IHS

Nader 良信电器
高端低压电气系统解决方案专家

PV Industry Inverter

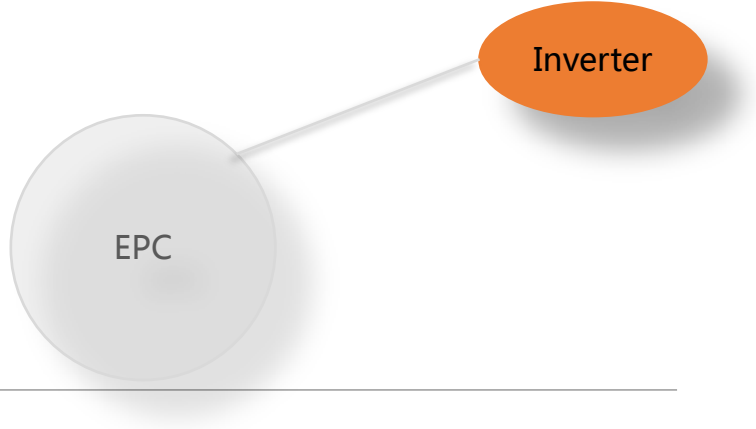

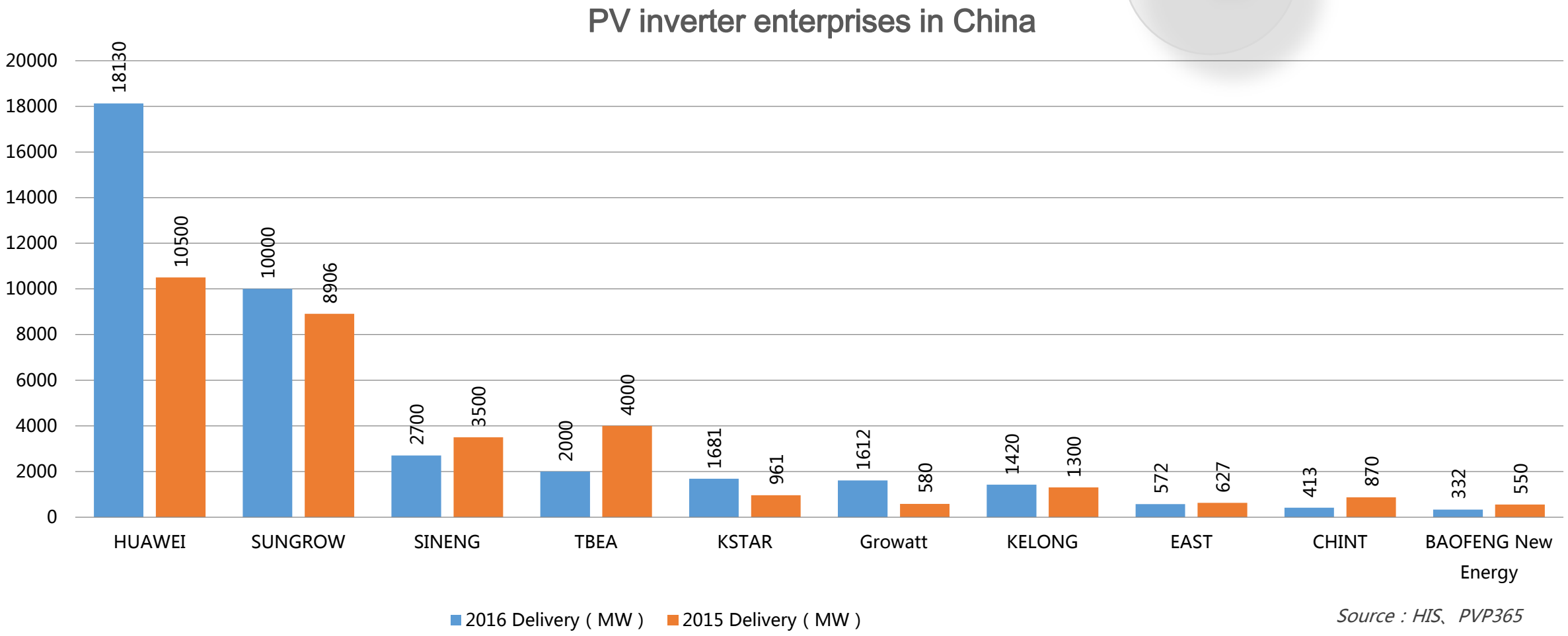

Source : HIS、PVP365

Nader 良信电器
高端低压电气系统解决方案专家

CONTENTS

Nader 良信电器
高端低压电气系统解决方案专家

PV POWER Solution dynamo theory

- The photoelectric volt effect of the semiconductor interface is used to convert light energy directly into electrical energy
- The large-capacity grid-connected photovoltaic power station is generally composed of photovoltaic power generation and ac boost

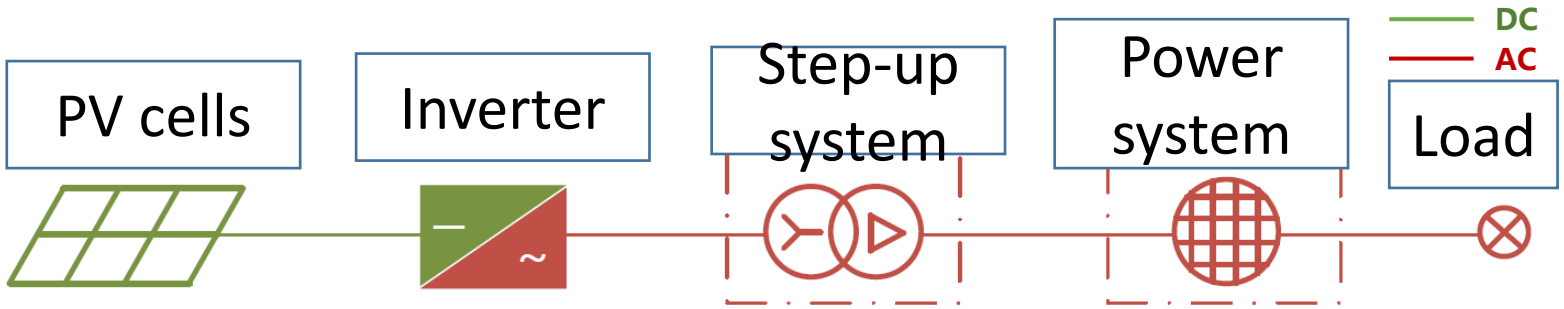

- The number of parallel series determines the output power of pv array
- The DC power is turned into sine wave current same frequency and phase with the grid.
- Boost to 10kv by transformer, access to power grid

Nader 良信电器
高端低压电气系统解决方案专家

PV Solution equipment

The large-scale grid PV power station usually has photovoltaic panel PV inverter and grid transformer

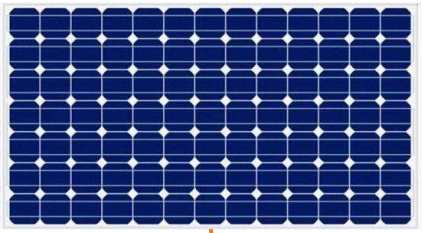

Photovoltaic module

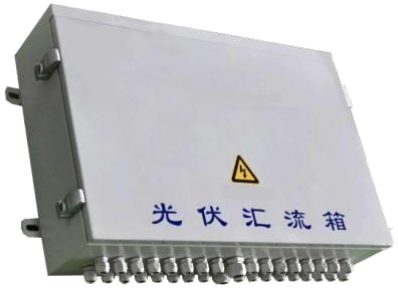

Combiner box

Inverter

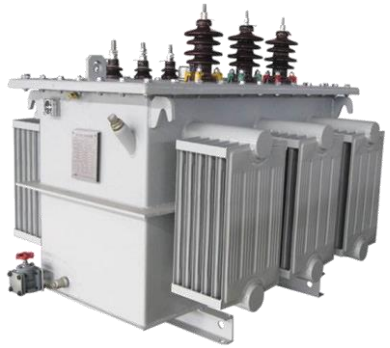

Grid transformer

Power transmission network

Inverter boost integrated solutions

Nader 良信电器
高端低压电气系统解决方案专家

Photovoltaic solution centralized &string

Centralized PV

Photovoltaic power generation system based on high-power photovoltaic inverter (over 500kW)

The location of the site is flat and the PV modules are generally oriented towards the same direction without any blockage

Generally ≥5MW even GW level

Power generation with 10KV or 35KV access to power grid，far from load, unable to be consumed locally

String PV

Photovoltaic module≤5 sets connected to grid inverter by string form

Flexible location，installed in hills，roof etc. Module orientation is inconsistent

Different capacity，less than 1 MW operable

Power generation with 10KV or 35KV access to power grid，far from load, unable to be consumed locally

Nader 良信电器
高端低压电气系统解决方案专家

Centralized Photovoltaic generation

1100VDC/690VAC Centralized photovoltaic power plant

LV distribution protection system

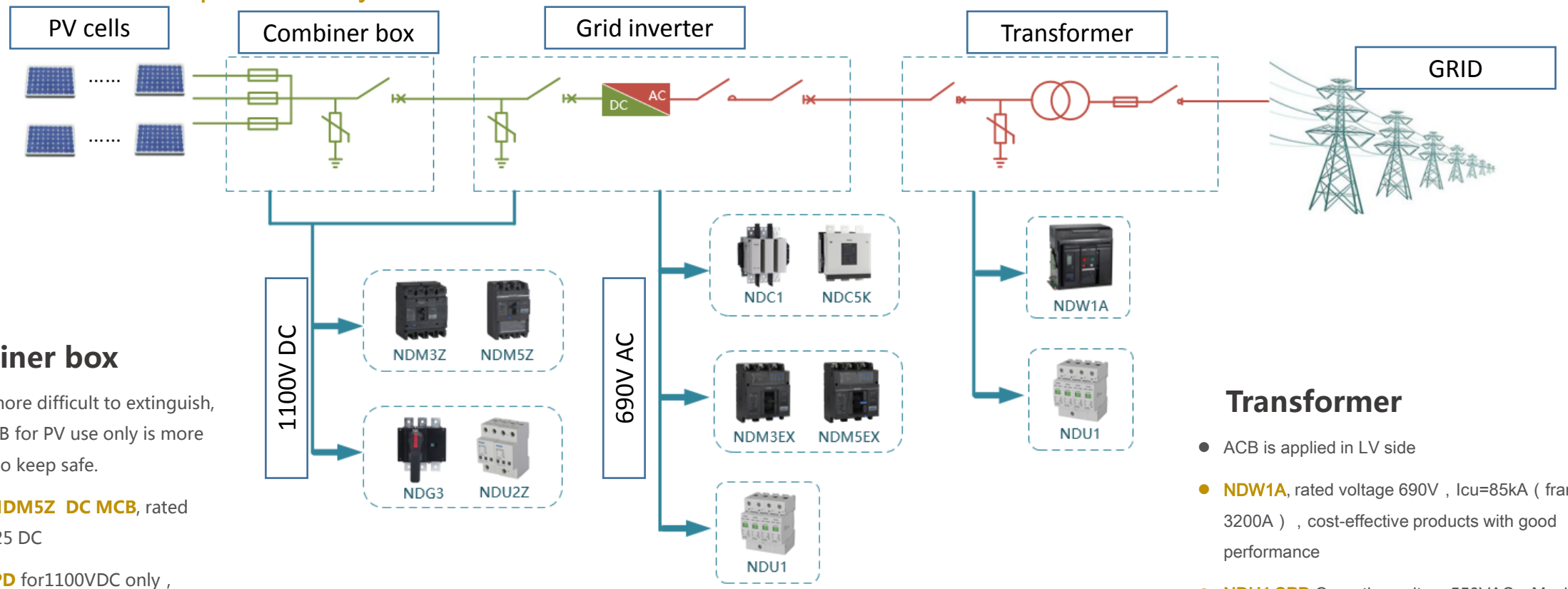

Combiner box

- DC arc is more difficult to extinguish, so DC MCB for PV use only is more preferred to keep safe.
- **NDM3Z/NDM5Z DC MCB**, rated voltage, 125 DC
- **NDU2Z SPD** for1100VDC only，voltage protection level ,4.3kA，maximum discharge current 40kA

Inverter

- AC contactor is used the main circuit. AC contator**NDC1**, Rated current, 1050~2650A。**NDC5K Vacuum contactor** contacts in vacuum room，smaller size with same characteristic.
- **NDM3EX MCB** specially designed for PV inverter, smallest size in the LV industry，Icu=70KA, 400VAC，leading the LV industry.

Transformer

- ACB is applied in LV side
- **NDW1A**, rated voltage 690V，Icu=85kA（frame 3200A），cost-effective products with good performance
- **NDU1 SPD** Operating voltage550VAC，Maximum discharge current reach 65kA，protecting lightning overvoltage.

Nader 良信电器
高端低压电气系统解决方案专家

Centralized Photovoltaic generation

1500VDC/800VAC Centralized photovoltaic power plant

LV distribution protection system

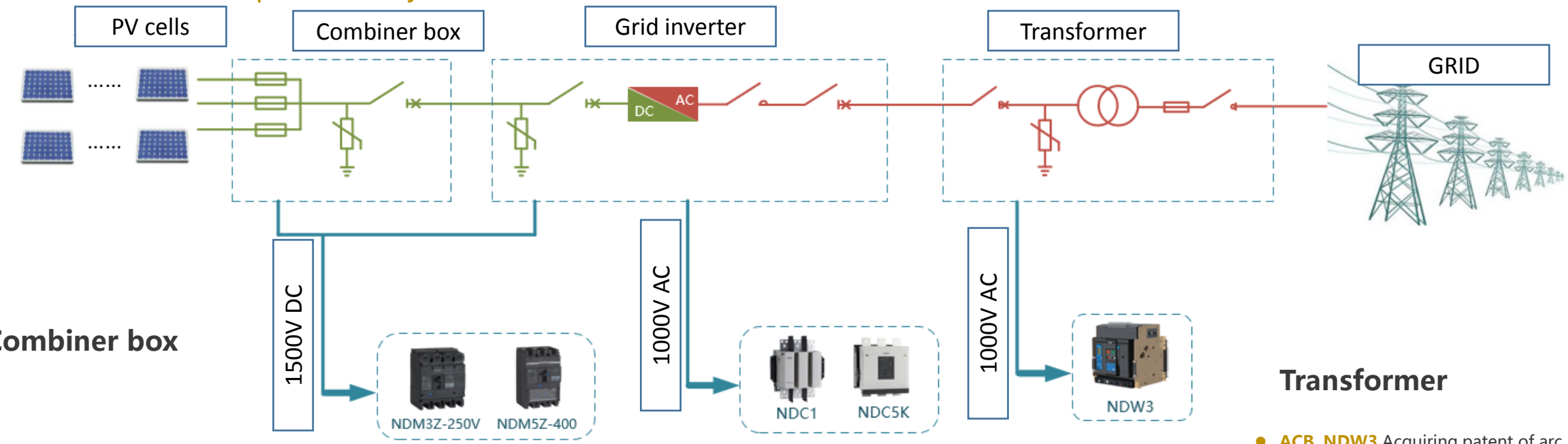

Combiner box

- **NDM3Z-250V MCCB** specially designed for 1500VDC，Icu=16kA
- **NDM5Z-400** is the latest developed DC MCB，rated voltage 1500V，double contacts, Icu=20kA，leading the industry

Inverter

- AC contator**NDC1**, AC contactor is used the main circuit. Rated current, 1050~2650A。**NDC5K Vacuum contactor** contacts in vacuum room，35% smaller than normal contactors with better characteristics.

Maximum rated voltage,1000VAC，suitable for inverters of different power.

Electrical life: 5000,000

Maximum switching capacity≥9.8KA

Transformer

- **ACB NDW3** Acquiring patent of arc quenching system, it increases breaking capacity and electrical life much more.

Rated voltage, 1000V

Optimising of operation structure，involving shaft sleeve material

Electrical life ：10000； mechanical：15000.

Nader 良信电器
高端低压电气系统解决方案专家

String Photovoltaic generation

1100VDC/690VAC Centralized photovoltaic power plant LV distribution protection system

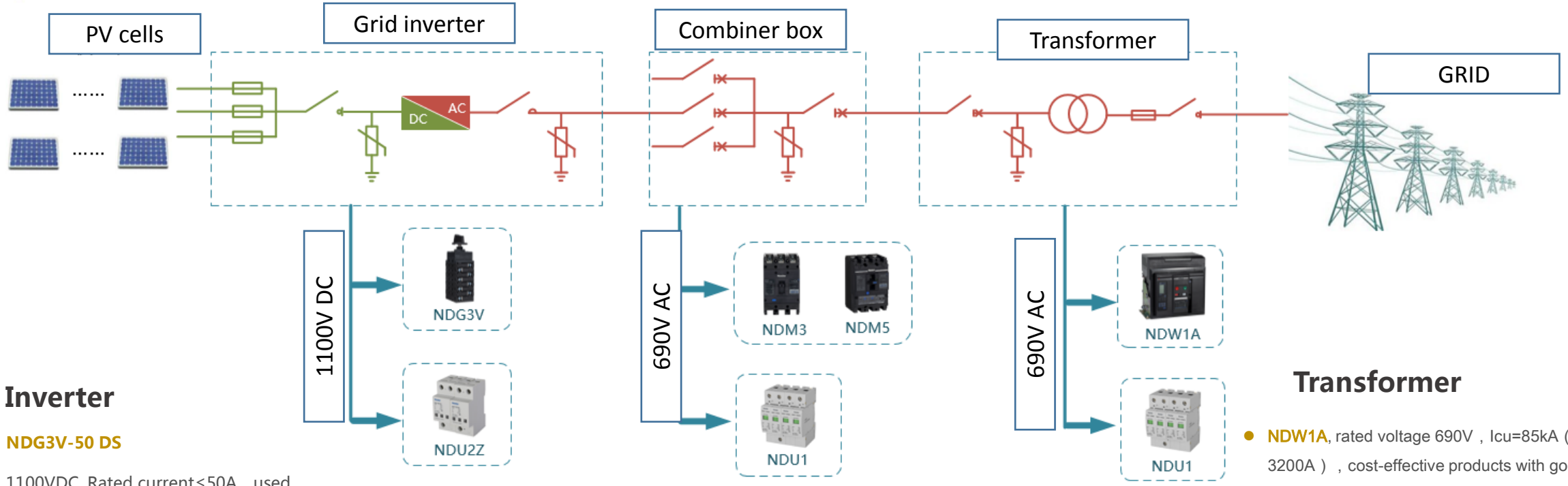

Inverter

- **NDG3V-50 DS**
- 1100VDC, Rated current≤50A，used for inspection and isolation.

small size

IP65

- **NDU2Z SPD** for1100VDC only，voltage protection level ,4.3kA，maximum discharge current 40kA

Combiner box

- **NDM3 MCCB**

Rated voltage 690VAC，125~1600A。

NDM3-400, 690VA Icu=20kA，

NDM5 MCCB Double contacts

The extinguishing ability of short circuit is greatly enhanced

At 690VAC Icu40kA Smallest size in the industry

Transformer

- **NDW1A**, rated voltage 690V，Icu=85kA（frame 3200A），cost-effective products with good performance
- **NDU1 SPD** continuous operating voltage 550VAC，maximum discharge voltage 65kA

Nader 良信电器
高端低压电气系统解决方案专家

String Photovoltaic generation

1500VDC/800VAC Centralized photovoltaic power plant

LV distribution protection system

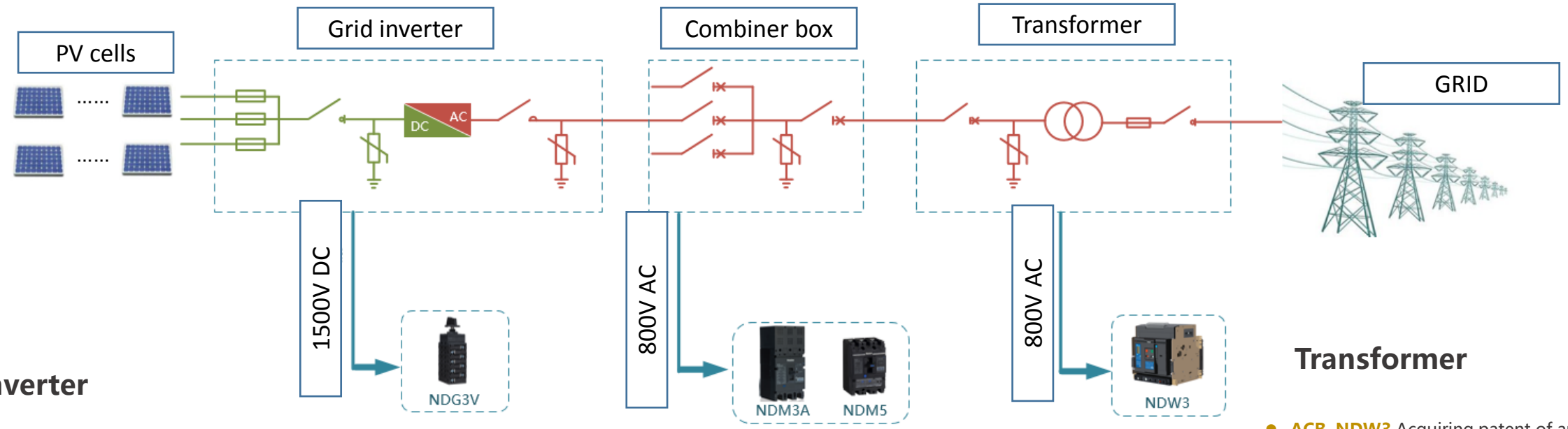

Inverter

- **NDG3V-50 DC DS** 1100~1500V
- High breaking capacity ,
- 1500VDC Rated current 20A , used for inspection and isolation.

small size

IP65

Combiner box

- **NDM3A MCCB** applied in inverter AC
- NDM3A-400 800VAC, Icu=30kA ,

NDM5 MCCB Double contacts

The extinguishing ability of short circuit is greatly enhanced

At 690VAC Icu40kA Smallest size in the industry

Transformer

- **ACB NDW3** Acquiring patent of arc quenching system, it increases breaking capacity and electrical life much more.

Rated voltage, 1000V

Optimising of operation structure , involving shaft sleeve material

Electrical life : 10000 ; mechanical : 15000.

Nader 良信电器
高端低压电气系统解决方案专家

PV solution Household distributed photovoltaic

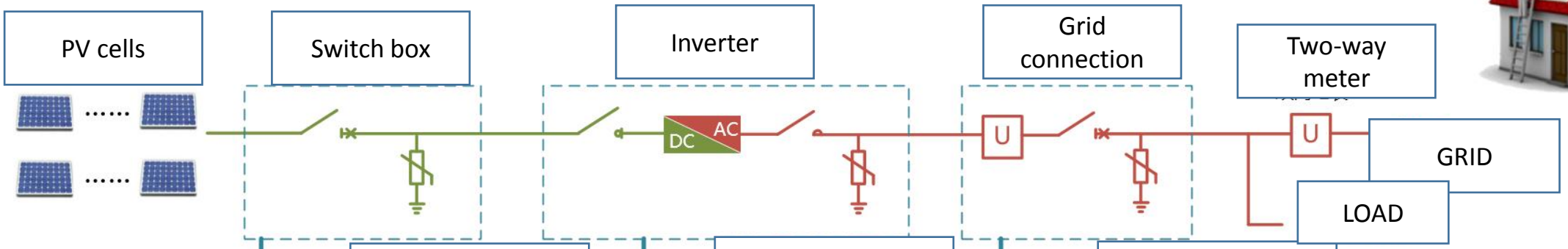

Combiner box

DC MCB

DC SPD

PV DC DS

SPD

Grid connected inverter

MCB, overvoltage protector

SPD

Grid connected box

Nader 良信电器
高端低压电气系统解决方案专家

CONTENTS

Nader 良信电器
高端低压电气系统解决方案专家

Foresee the PV future outline

Distributed PV system

VOLTAGE

1500VDC
1000VAC

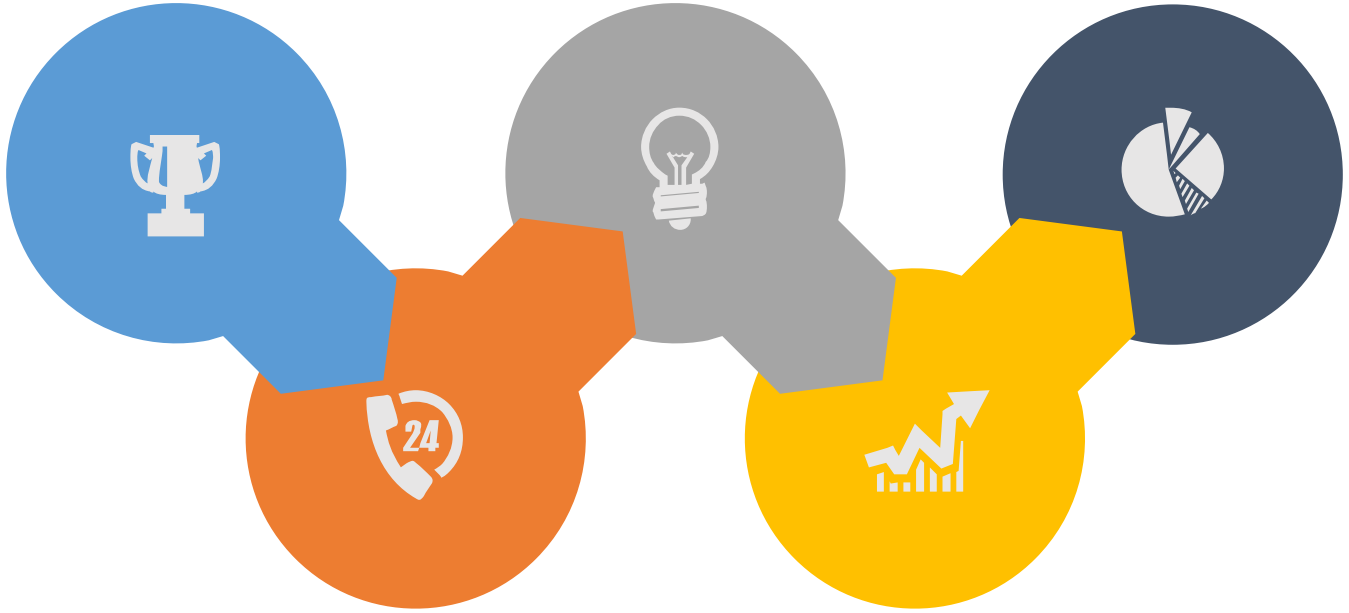

Inverter & transformer integrated

Integrated solution more economic

Giant power

String PV system:120kW
Centralized PV system：1.5/2MW

Smart

Remote control、no maintaining、telecommunication

Nader 良信电器
高端低压电气系统解决方案专家

Trend Distributed PV

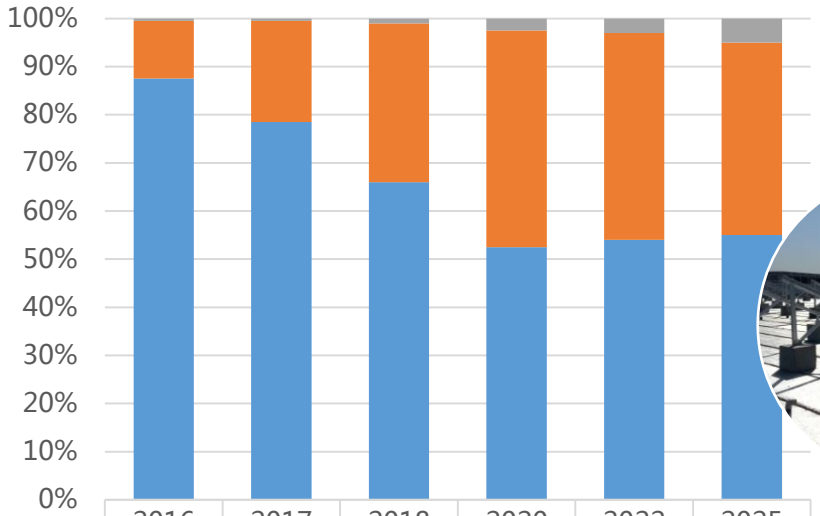

	2016	2017	2018	2020	2022	2025
Others	0.5%	0.5%	1.0%	2.5%	3.0%	5.0%
Distributed power station	12.0%	21.0%	33.0%	45.0%	43.0%	40.0%
Large surface power station	88.0%	78.5%	66.0%	52.5%	54.0%	55.0%

Inverter
- string inverter rising

✓ DC isolating switch demand increased

Combiner box
- AC rising
- DC decreasing

Transformer

✓ AC MCCB increased
✓ DC MCCB decreased

Environment
- Highland
- Thunder
- High temp，humidity
- Frost

✓ High breaking capability

Nader 良信电器
高端低压电气系统解决方案专家

Trend Distributed PV

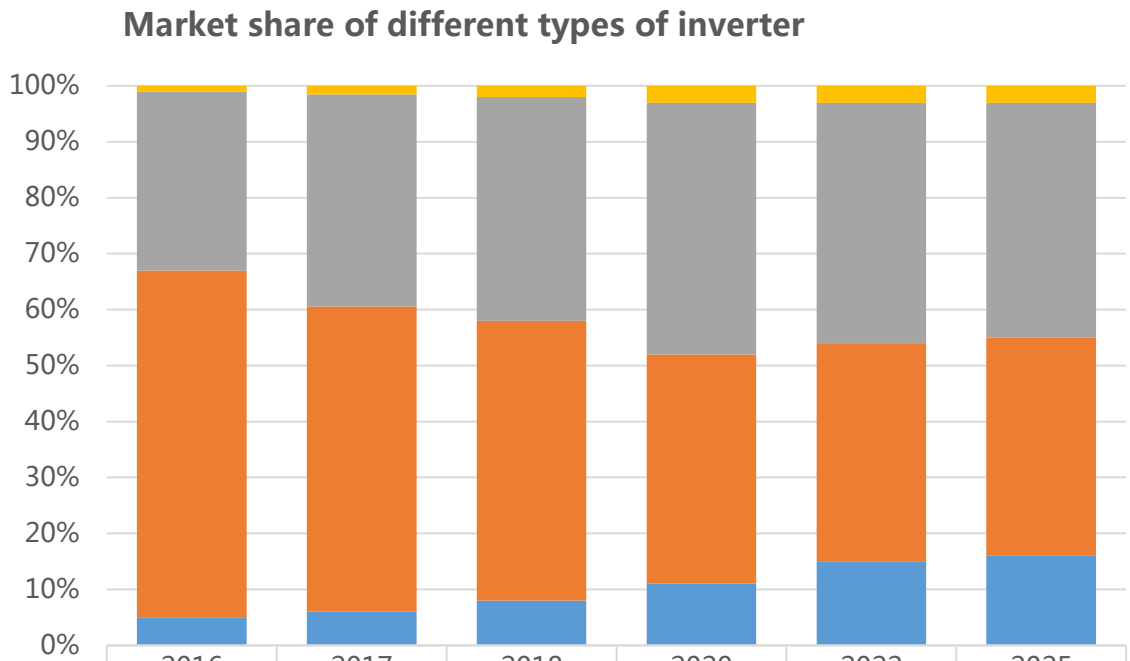

	2016	2017	2018	2020	2022	2025
Micro inverter	1.0%	1.5%	2.0%	3.0%	3.0%	3.0%
String inverter	32.0%	37.5%	40.0%	45.0%	43.0%	42.0%
Centralized inverter	62.0%	54.0%	50.0%	41.0%	39.0%	39.0%
Distributed inverter	5.0%	6.0%	8.0%	11.0%	15.0%	16.0%

Trend High voltage

- High voltage reduce the line loss and the amount of copper
- 1500VDC ;
- 800 , 1000VAC ;

Market share of different system voltage levels

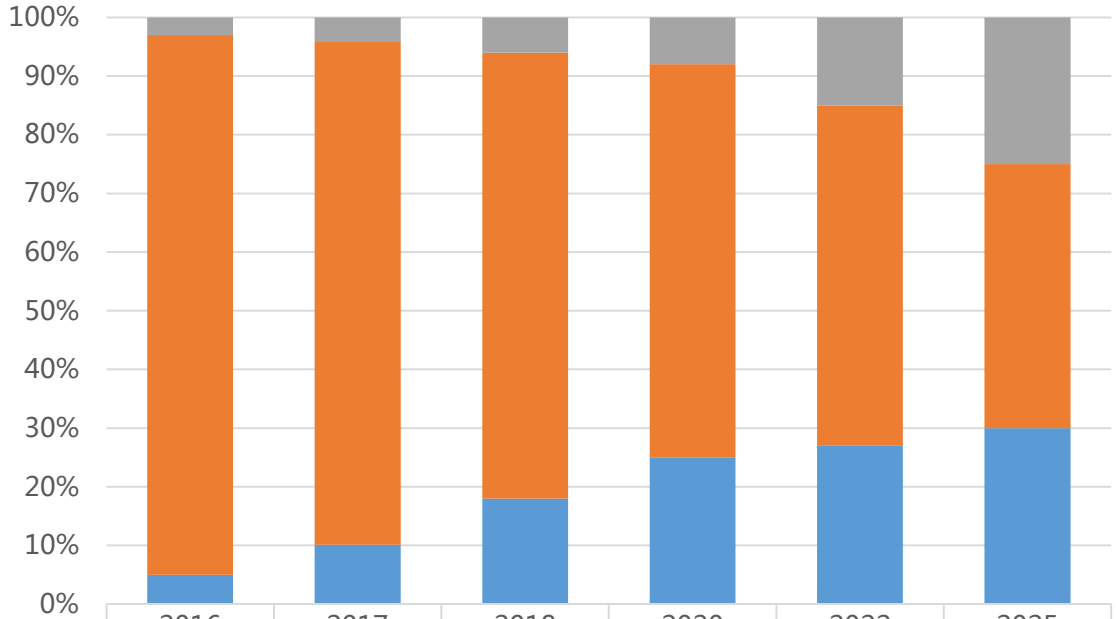

	2016	2017	2018	2020	2022	2025
Others	3.0%	4.0%	6.0%	8.0%	15.0%	25.0%
1000V	92.0%	85.0%	76.0%	67.0%	58.0%	45.0%
1500V	5.0%	10.0%	18.0%	25.0%	27.0%	30.0%

1500V DC Disconnection switch、DC MCCB

1000VAC ACB、DC MCCB, Contactor

Nader 良信电器
高端低压电气系统解决方案专家

Trend High power

- String system 100kW，120kW
- Centralized system 1.5MW、2MW available

- String system 1500V/32A Disconnection switch
- Centralized system1500VDC/400A

  DC MCCB

- 1000V AC/1600A MCCB Contactor

  AC side， Icu higher

  Smaller size

Market share of different inverter power

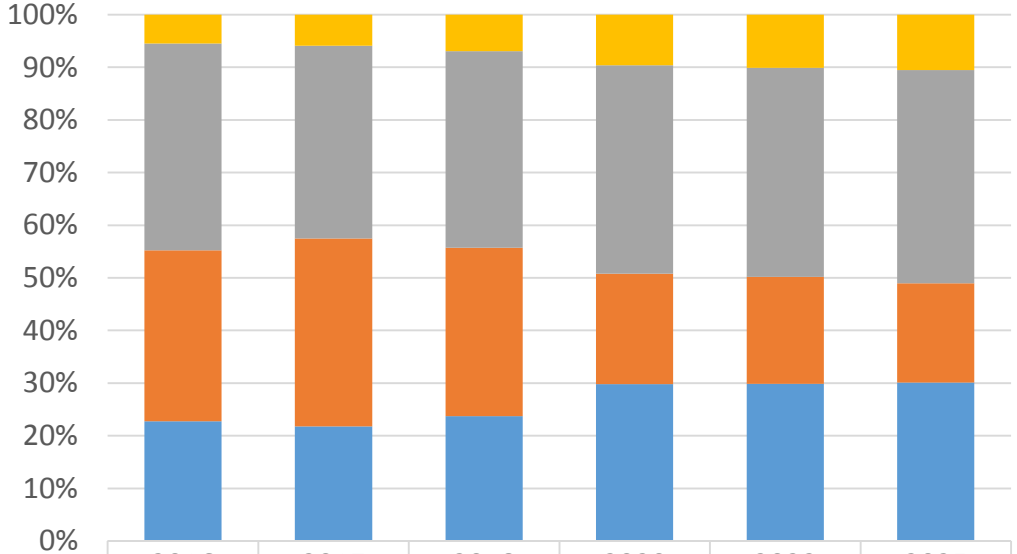

	2016	2017	2018	2020	2022	2025
x<10kW	4.9%	5.9%	6.9%	9.6%	10.1%	10.5%
10kW<x<100kW	35.4%	36.6%	37.4%	39.6%	39.7%	40.5%
100kW<x<100kW	29.2%	35.7%	32.0%	21.0%	20.3%	18.9%
x>1000kW	20.5%	21.8%	23.7%	29.8%	29.9%	30.1%

Nader 良信电器
高端低压电气系统解决方案专家

Trend Inverter &Transformer integrated

- Inverter &Transformer integrated solution reduce circuit breakers in AC side and decrease the cost.
- Equipment providers prefer ACB.
- Low voltage devices shrink.

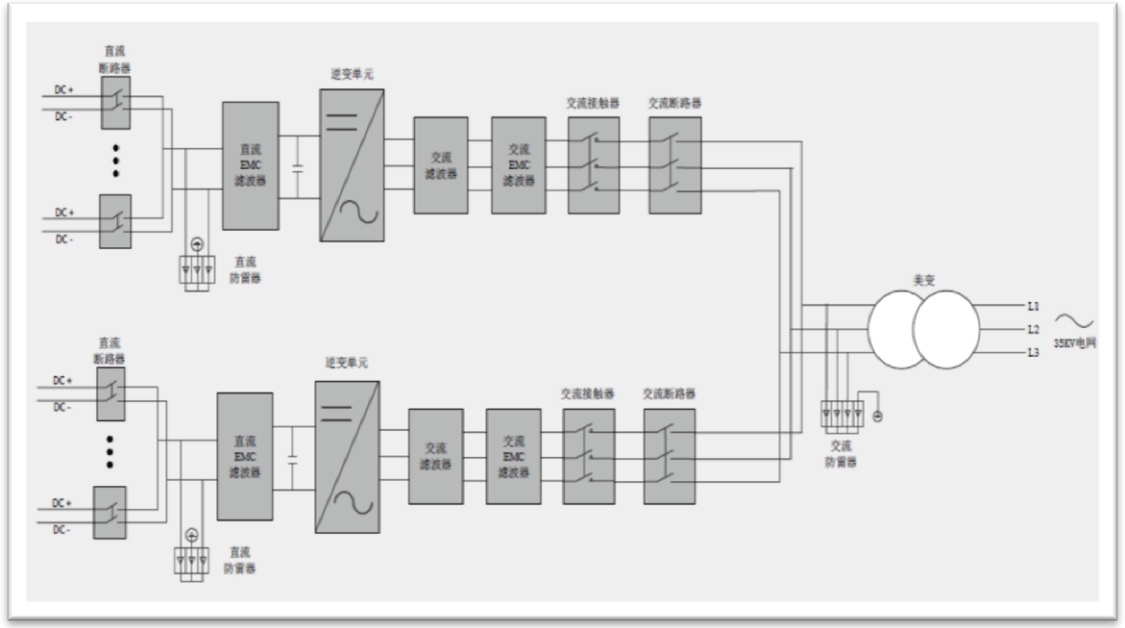

Nader 良信电器
高端低压电气系统解决方案专家

Trend Automation and intelligence

Automation:

Reactive power compensation at night and disconnect the photovoltaic panel in SVG mode then automatically switch on the next morning;

After the misoperation and failure protection, it will automatically turn on the lock and reduce the operation and maintenance work;

The use of remote closing can reduce the number of manual closing times so as to protect the safety of maintenance personnel;

Finally achieve the goal of reducing the number of operations and reducing costs.

As a component node of smart grid;

Data collection: sensors make traditional equipment digital and intelligent;

Remote communication, adapt to TCP/IP, RS485, etc;

Shared data ;

Big data intelligent online analysis, predicting failure, early operation, reducing the number of passive stops;

Remote diagnosis, auxiliary decision-making, quick troubleshooting, reduced operation time;

Trend Globalization

The main application of the northwest region is the high sandstorm area.

The area is located in the gobi, grassland, remote, installation/maintenance is not easy

The power station is large and needs to be built quickly to generate value.

High reliability

The equipment requires high environmental adaptability (high latitude, high/low temperature, high wind sand)

The equipment needs to be easy to maintain and reduce the impact of maintenance on the power station

The European application environment is good

High labor cost and simplified engineering quantity

High reliability;

Equipment installation/maintenance is required to reduce installation/maintenance costs

Poor application environment in the Middle East

Large sandstorm, severe salt fog

High temperature

High reliability

It is required to prevent dust, sand, high temperature and salt spray

Trend The development roadmap of the photovoltaic industry

Power rating:	3~60kW	3~120kW
DC voltage	360V~800V	360~1160V
AC voltage	230V single 400V~540V three phase	230V single phase 400V~1000V three phase

2017 — Power, voltage increasing → 2019

Power rating:	500kW~1500kW	1000~2500kW
DC voltage	450V~900V	800~1300V
AC voltage	315V~400V	400V~1000V

1.According to the development trend of the above industries, it is believed that the framework and the large contactor can meet the demand of photovoltaic power generation industry in a short time.

2 Planning for future demand of DC disconnection switch, DC MCCB and AC MCCB.

Nader 良信电器
高端低压电气系统解决方案专家

Trend The development roadmap of the photovoltaic industry

Electrical life：5000

Mechanical life：20000

Operating temperature：

-40~+75℃

Meet the requirements of dust and dust environment

Remote sub-switching function

Rated voltage	1000V DC	1500V DC
Rated current	250A	400A

2017 — Voltage, current increasing → 2019

Electrical life：5000

Mechanical life：20000

Operating temperature：

-40~+75℃

Meet the IP67 cabinet without fan temperature rise test

Overpressure, pressure loss, check the function of pressure closing

Rated voltage	690VAC	1000VAC
Rated current	250A	400A

Nader 良信电器

高端低压电气系统解决方案专家

Trend The development roadmap of the photovoltaic industry

Electrical life：5000

Mechanical life：20000

Operating temperature：

-40~+75℃

Handle protection grade:：IP67

Meet the IP67 cabinet without fan temperature rise test

Rated voltage	1000VDC	1500VDC
Rated current	32A	32A
Pole	2、4、6、8	2、4、6、8、10

2017 → Voltage, current increasing → 2019

Mechanical life ：20000次

Operating temperature：

-40~85℃

Breaking capacity：8~12Ie

（20times）

Meet the IP67 cabinet without fan temperature rise test

Rated voltage	1000V/1500VDC	1000V/1500VDC
Rated current	12A	32A

Nader 良信电器

高端低压电气系统解决方案专家

Trend The development roadmap of the photovoltaic industry

Mechanical life ：20000次

Operating temperature：

-40~85℃

Handle protection grade: IP65

Meet the IP67 cabinet without fan temperature rise test

Rated voltage	690VAC	1000VAC
Rated current	160A	400A

2017 — Voltage, current increasing → 2019

目录
CONTENTS

Nader 良信电器
高端低压电气系统解决方案专家

Typical cases EPC Cooperation

NDM5Z DC1200V successful enters into

CGN， Over 300MW of procurement has been achieved ， In 2016,Nader have signed the purchase contract with ShenZhen Winline/KSTAR/Kelong/Chint,etc.


中广核 CGN

中广核太阳能开发有限公司

CGN Solar Energy Development Co., Ltd.

技术规范书

文件编码（Doc.Code）：

内部编码（Ori. Code）：

正文页数+附件页数（Pages+Annexes）：

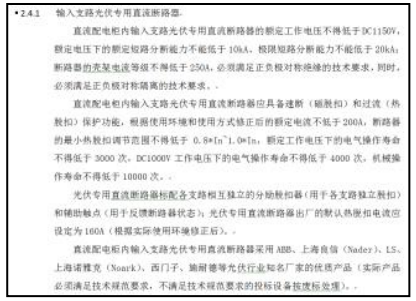
•2.4.1 输入支路光伏专用直流断路器

直流配电柜内输入支路光伏专用直流断路器的额定工作电压不得低于DC1150V，额定电压下的额定短路分断能力不能低于10kA，极限短路分断能力不能低于20kA；断路器的壳架电流等级不得低于250A，必须满足正负极对称绝缘的技术要求，同时，必须满足正负极对称隔离的技术要求。

直流配电柜内输入支路光伏专用直流断路器应具备速断（磁脱扣）和过流（热脱扣）保护功能，根据使用环境和使用方式修正后的额定电流不低于200A，断路器的最小热脱扣调节范围不得低于 0.8*In~1.0*In，额定工作电压下的电气操作寿命不得低于 3000 次，DC1000V 工作电压下的电气操作寿命不得低于 4000 次，机械操作寿命不得低于 10000 次。

光伏专用直流断路器标配各支路相互独立的分励脱扣器（用于各支路独立脱扣）和辅助触点（用于反馈断路器状态）；光伏专用直流断路器出厂的默认热脱扣电流应设定为 160A（根据实际使用环境修正后）。

直流配电柜内输入支路光伏专用直流断路器采用 ABB、上海良信（Nader）、LS、上海诺雅克（Noark）、西门子、施耐德等光伏行业知名厂家的优质产品（实际产品必须满足技术规范要求，不满足技术规范要求的投标设备按废标处理）。

Nader DC products have entered in **more than 20 EPC**（TBEA/GCL/TALESUN/LINGYANG/Jinko/TianHe ,etc.）used in combiner box/inverter/ substation；

中广核 CGN 善用自然的能量

TBEA 特变电工 Always Reliable 全球信赖

GCL 协鑫新能源

JinKo 晶科能源

Aikosolar 爱康太阳能

上海太阳能科技有限公司 Shanghai Solar Energy Science & Technology Co.,Ltd

Trinasolar 天合光能

中科恒源 ZKenergy

TALESUN 中利腾晖光伏 ZHONGLI TALESUN SOLAR

CCE 中国清洁能源 CHINA CLEAN ENERGY

Hareonsolar 海润光伏科技

林洋 LINYANG

中民投资集团 ZHONG MIN INVESTMENT GROUP

Nader 良信电器

高端低压电气系统解决方案专家

Typical cases equipment providers cooperation

Strategic cooperation with core companies in PV industry. Providing whole product solution of PV industry.

SUNGROW 阳光电源

SINENG

TBEA 特变电工 Always Reliable 全球信赖

HUAWEI

EAST 易事特

KSTAR 科士达

KELONG 科华技术

逼日电气 SURPASS SUN ELECTRIC

CFAT Automation technology

XJ 许继集团有限公司 XJ GROUP CORPORATION

LongMax 隆瑪科技 Enjoy The Sunny Life

TGOOD 特锐德

XD 中国西电 CHINA XD

Nader 良信电器
高端低压电气系统解决方案专家

Typical cases QingHai XiTie mountain PV project 100MV

The first PV station above on the 3000M in China.

This project locates at QingHai XiTie mountain, It's the first PV project's altitude more than 3,000 meters in China. This is the first PV project in such high altitude and tough environment. Nader provided solution for all LV distribution system protection.

☐ Application

100MW inverter/combiner box

EPC：CGN

☐ Main products

NDM3Z MCCB

Typical cases Pakistan 900MV PV project

The leading international project in 'Belt and Road'

The 900MW photovoltaic ground power station invested by ZTE Energy Co., Ltd, locating in Bahawalpur Burwina Solar Industrial Park, Punjab, Pakistan. With a total investment of more than 1.5 billion U.S. dollars, it is one of the priority implementation projects of the CMB Economic Corridor, the first project completing financing of the Economic corridor and the first energy project for grid power generation. This project led the international project construction of 'Belt and Road'.

☐ Application

900MW inverter/combiner box

EPC : Sungrow

☐ Main products

NDM3Z/NDM5E MCCB

Typical cases Uzbekistan 100MV PV project

The first large PV plant project in Uzbekistan

The 100MV PV power station invested by ZhuHai XingYe technology Co., Ltd, locating in Usamarkand , Uzbekistan. Uzbekistan mainly relies on thermal power and hydroelectric power generation, photovoltaic power generation is almost blank. This plant will be the first large PV plant project in Uzbekistan

☐ Application

100MW Box Transformer Substation

EPC : Ming Yang Electrical

☐ Main products

NDW1A ACB